Series TS - Raised Base

Terminal Blocks; 8.00, 10.00mm Centers

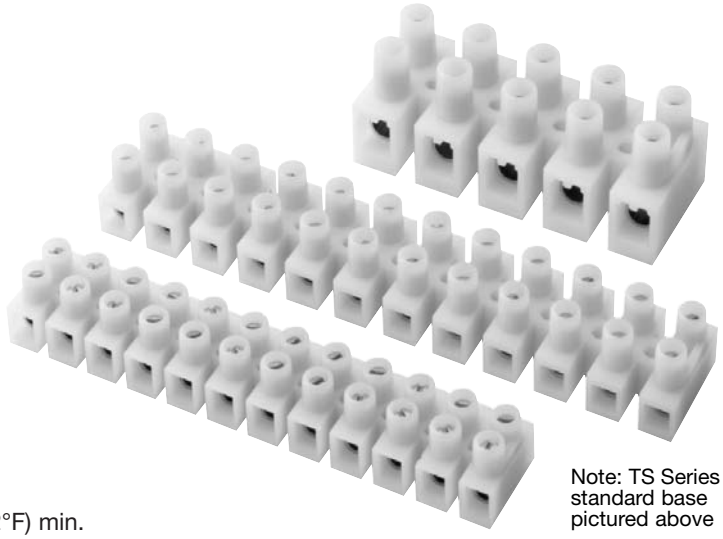

Note: TS Series standard base pictured above

SPECIFICATIONS

Rating: TS08 – 20A, 600V
TS10 – 30A, 600V
Wire Range: See Table
Housing Material: Polyamide Type 6/6, 94V2 (white)
Contact Material: Nickel Plated Brass
Wire Protector: Stainless Steel
Screw Size: See Table
Operating Temperature: 105°C (221°F) max., -30°C (-22°F) min.
Torque Rating: See Table
Construction: Mold to Length
Agency Information: UL/CSA; CE Certified

# 0f Poles	A Dimensions			
	TS08		TS10	
	mm	in	mm	in
2	15.80	o.622	17.50	0.689
3	23.80	0.937	27.50	1.083
4	31.80	1.252	37.50	1.476
5	39.80	1.567	47.50	1.870
6	47.80	1.882	57.50	2.264
7	55.80	2.232	67.50	2.657
8	63.80	2.512	77.50	3.051
9	71.80	2.827	87.50	3.445
10	79.80	3.142	97.50	3.839
11	87.80	3.457	107.50	4.232
12	95.80	3.772	117.50	4.626

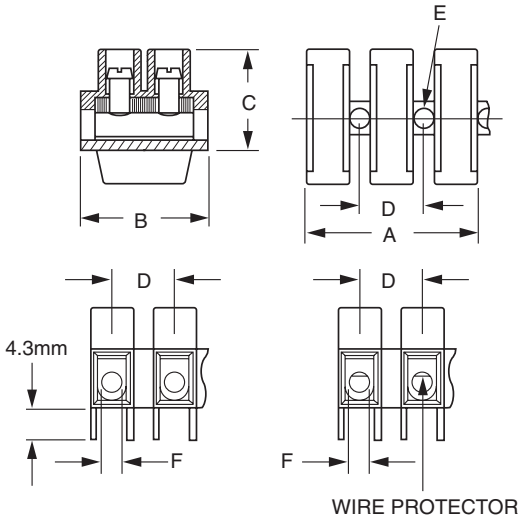

Position	Torque in-lb	Clamping Area	Wire Range AWG (cu.)	Dimensions (mm/in.)						
				Screw	Unit	B	C	D	E	F
TS0805	3.5	4.0mm²	22-12 Sol./Str.	M2.6x5	(mm) (in)	16.30 0.64	16.90 0.67	8.00 0.32	2.90 0.11	2.8±0.1 0.11
TS0806	3.5	1.5mm²	22-12 Sol./Str	M2.6x5	(mm) (in)	16.30 0.64	16.90 0.67	8.00 0.32	2.90 0.11	2.8±0.1 0.11
TS1005	4.4	6.0mm²	22-10 Sol. 14-10 Str.	M3.0x6	(mm) (in)	20.20 0.80	20.10 0.79	10.00 0.39	3.60 0.14	3.2±0.1 0.13
TS1006	4.4	2.5mm²	22-12 Sol./Str. 10 Sol.	M3.0x6	(mm) (in)	20.20 0.80	20.10 0.79	10.00 0.39	3.60 0.14	3.2±0.1 0.13

Part Numbering System

Spacing		Base	Positions
T S □ □	–	□ □	□ □
08 **10**		**05** - stand offs **06** - stand offs w/ wire protector	**02** to **12**